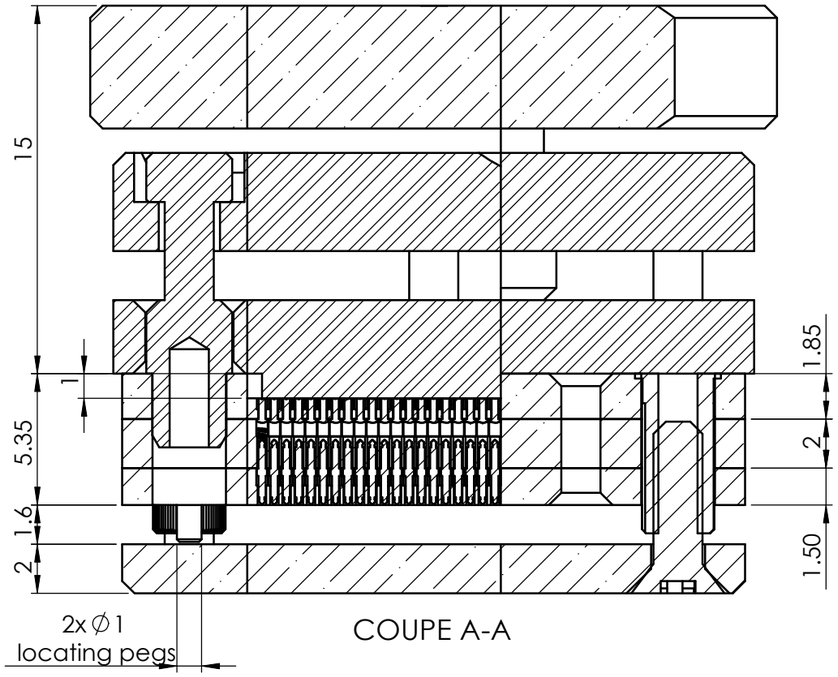

COUPE A-A

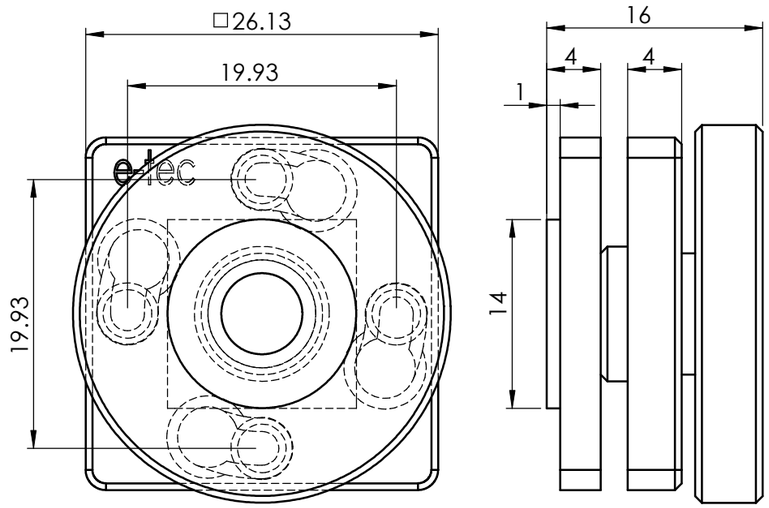

RETENTION FRAME

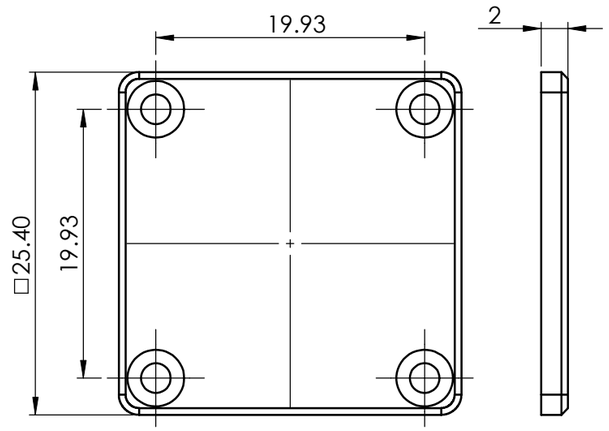

ASSEMBLY BOARD

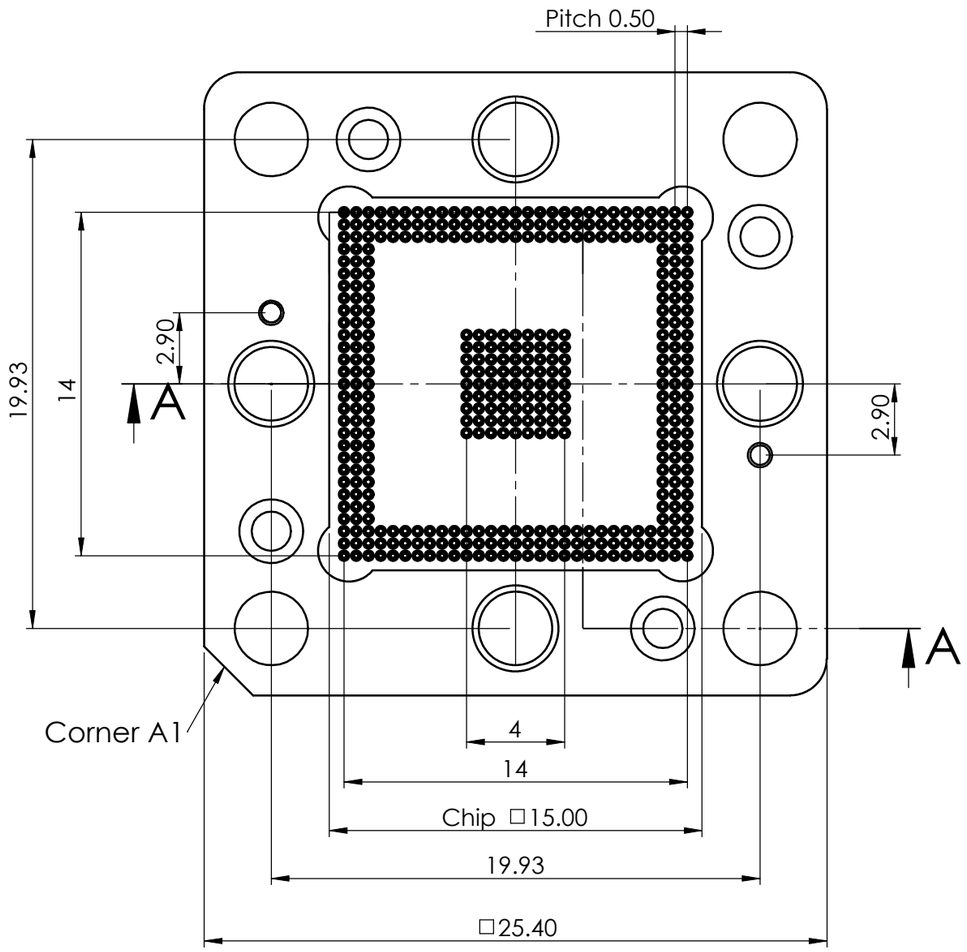

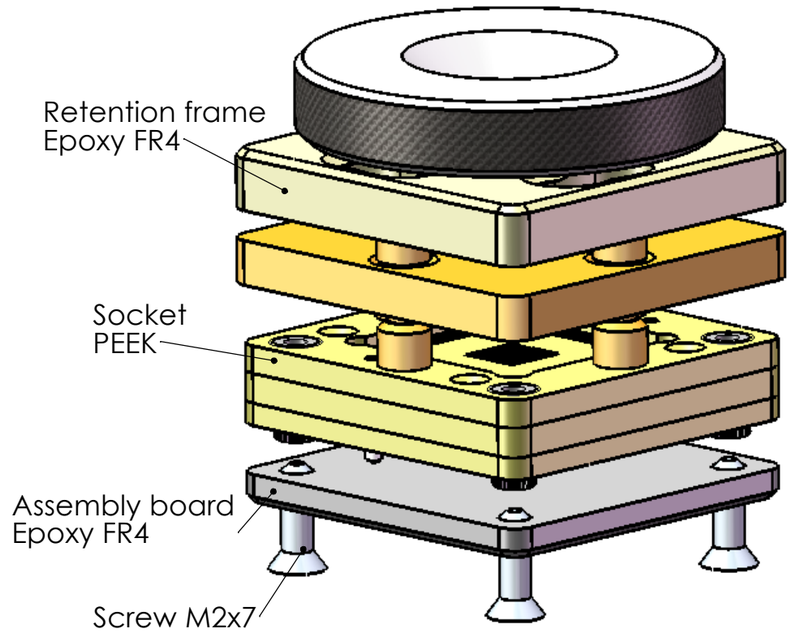

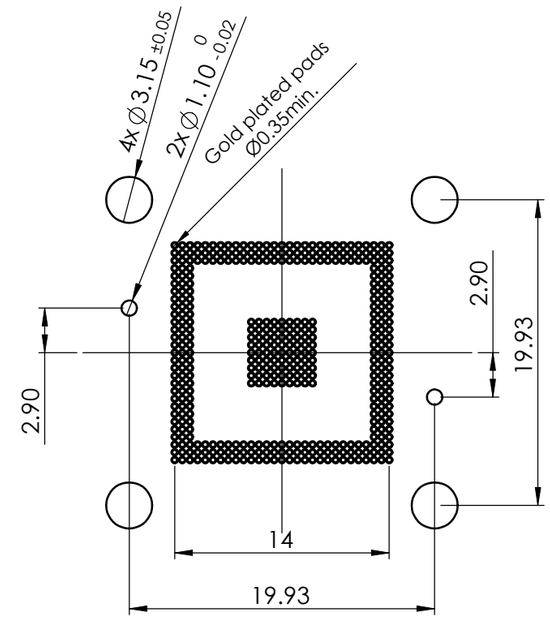

PCB LAYOUT

UNLESS OTHERWISE SPECIFIED: DIMENSIONS ARE IN MILLIMETERS SURFACE FINISH: GENERAL TOLERANCES ISO 2768m "top view drawing"	Remark: BGA Socket solderless Pitch 0.50mm , Matrix 29x29 Basic system 12x12					E-tec Interconnect www.e-tec.com
Patented	Visa	Date	Drawn by	Date	Visa	
DRAWN	sme	04.03.2009	sme	04.03.2009		
CHK'D						
APPV'D	sme	04.03.2009	Echelle: 4:1			TITLE: BUB393-0590-29AL55L — A3H
			MATERIAL: .			DWG NO. BUB0393-05-09232-29ALA-L — 0 Revision
The information contained in this drawing is proprietary to Happ AG and shall not be reproduced or disclosed in whole or in part or used for any design or manufacture except whe such user possesses direct, written authorization from Happ AG			WEIGHT:			SHEET 1 OF 1

G:\Konstruktion\Dessins Solidworks\Dessins\BGA\BUB\BUB393\BUB0393-05-09232-29ALA-L