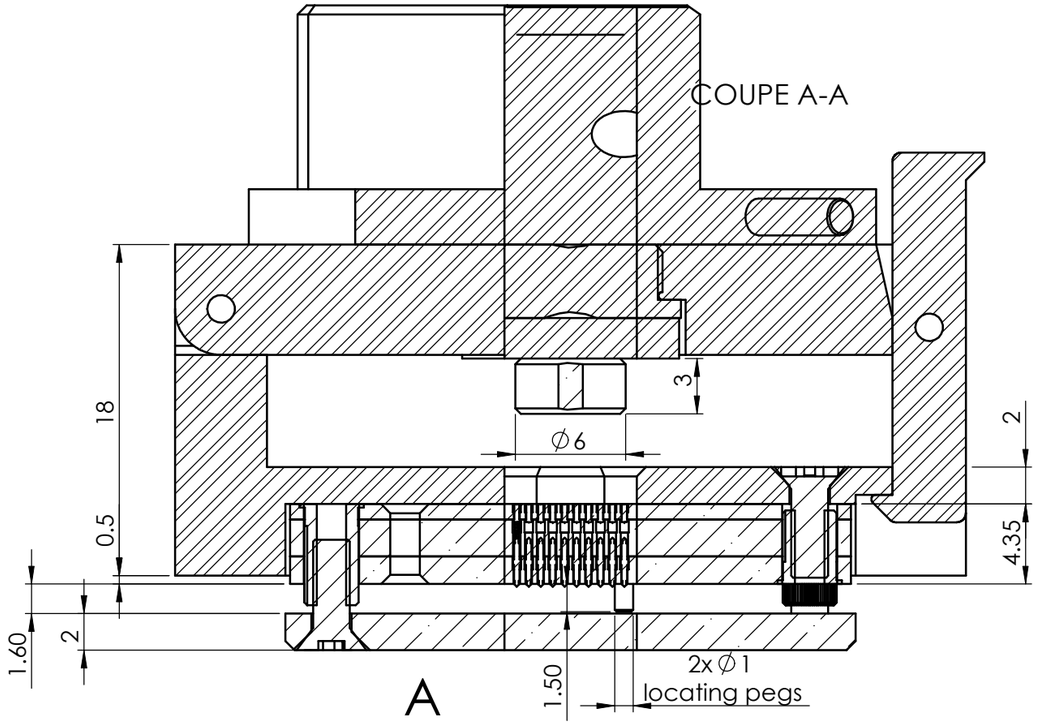


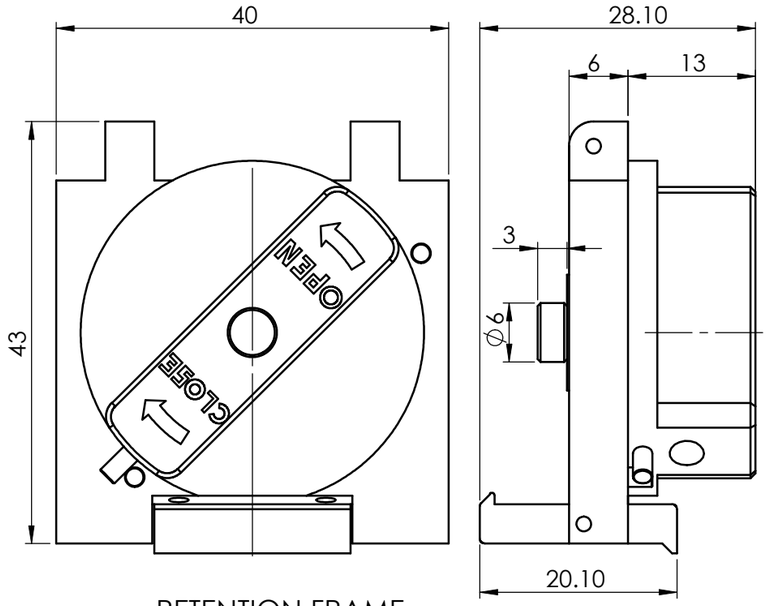


RETENTION FRAME

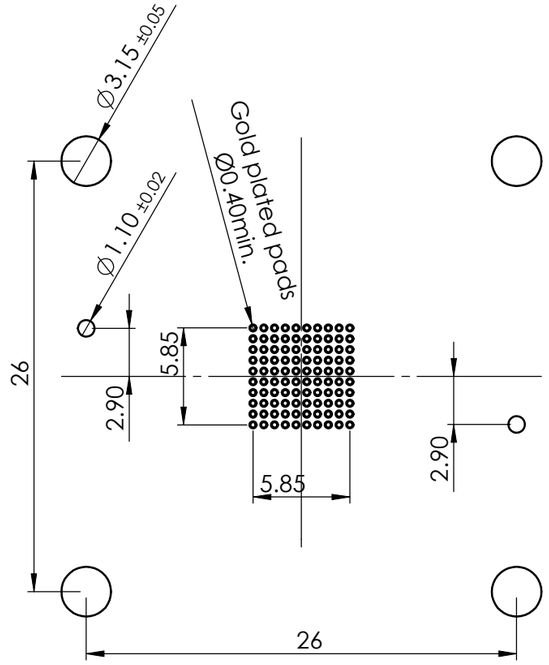


PCB LAYOUT

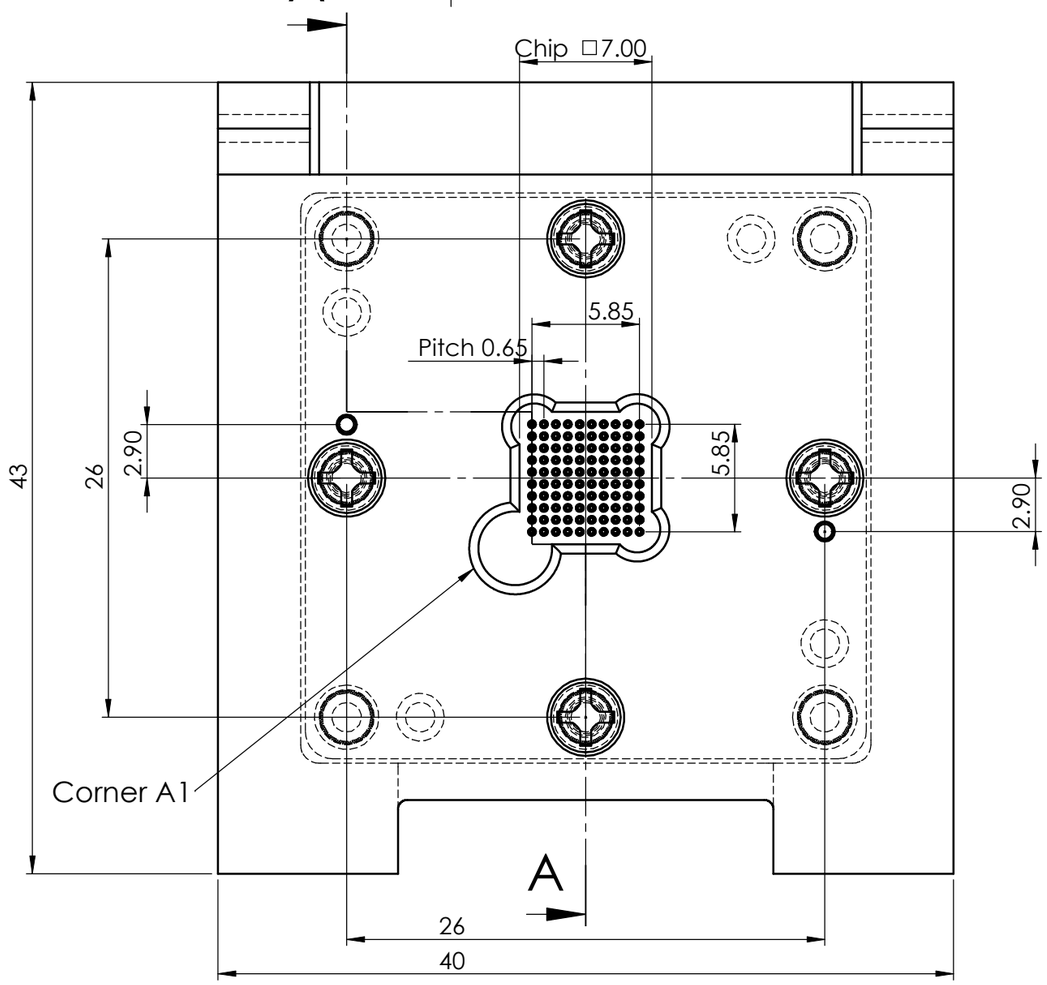


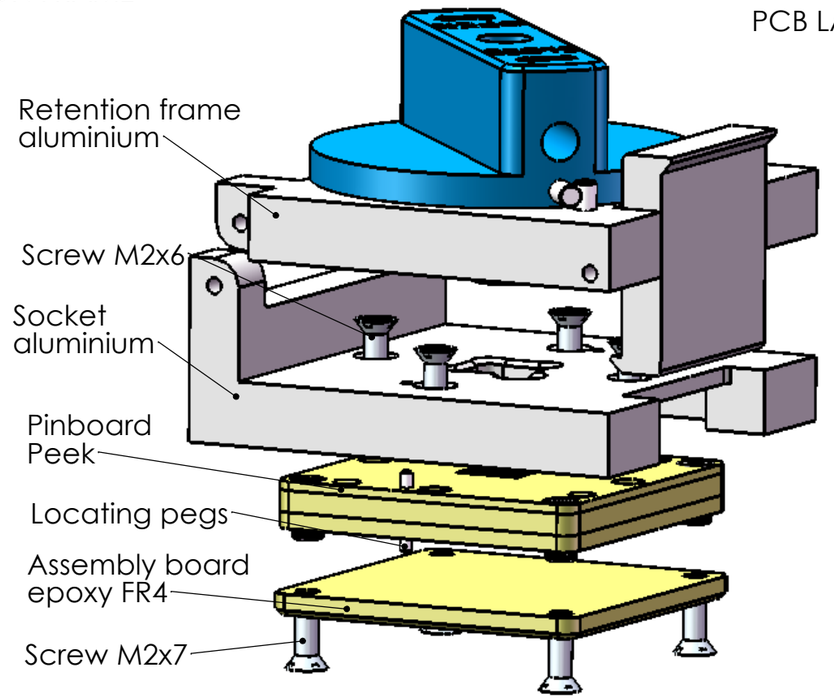


UNLESS OTHERWISE SPECIFIED:
DIMENSIONS ARE IN MILLIMETERS
SURFACE FINISH:
GENERAL TOLERANCES ISO 2768m

Remark: BGA Clamschell socket, 100pins, pitch 0.65mm, matrix 10x10, basic system 43x40

E-tec Interconnect
www.e-tec.com

| Patented | Visa | Date | Drawn by | Date | Visa |
|---|---|---|---|---|---|
| DRAWN | sme | 22.10.2008 | sme | 22.10.2008 | |
| CHK'D | | | | | |
| APPV'D | K.S | 22.10.2008 | | | |

Echelle: 3:1

MATERIAL: .

WEIGHT:

"E-tec code" BUC100-0690-10AA55L A3H

"Production code" BUC0100-06-09232-10AAA-L 0 Revision

SHEET 1 OF 1

The information contained in this drawing is proprietary to Happ AG and shall not be reproduced or disclosed in whole or in part or used for any design or manufacture except whe such user possesses direct, written authorization from Happ AG

G:\Konstruktion\Dessins Solidworks\Dessins\BGA\BUC\BUC100\BUC0100-06-09232-10AAA\BUC0100-06-09232-10AAA-L