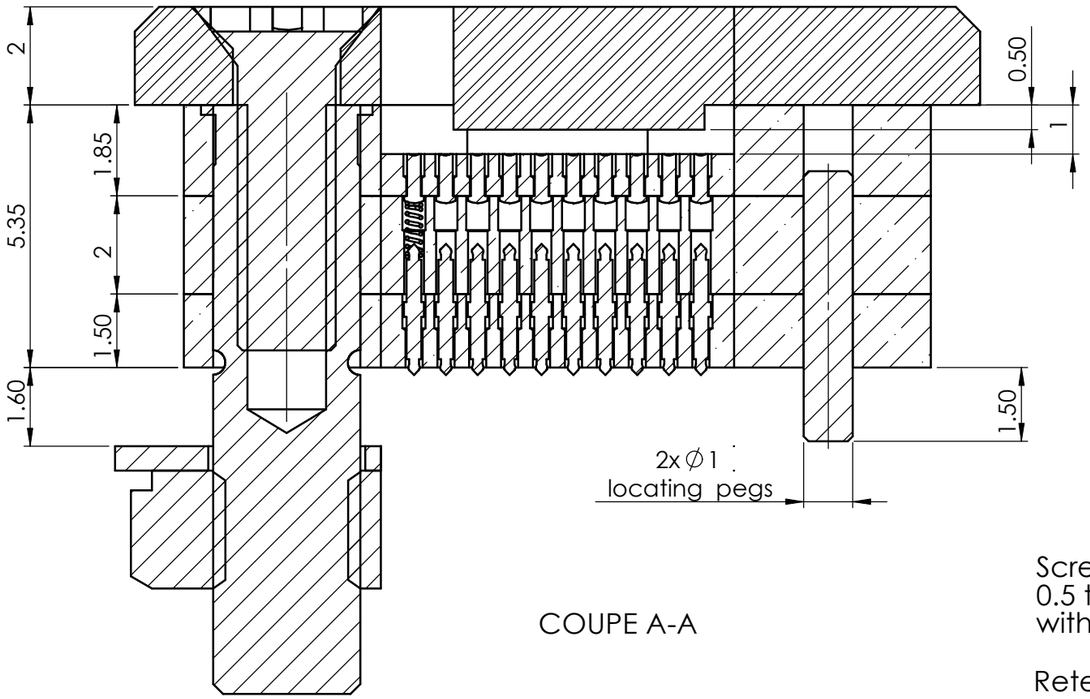

COUPE A-A

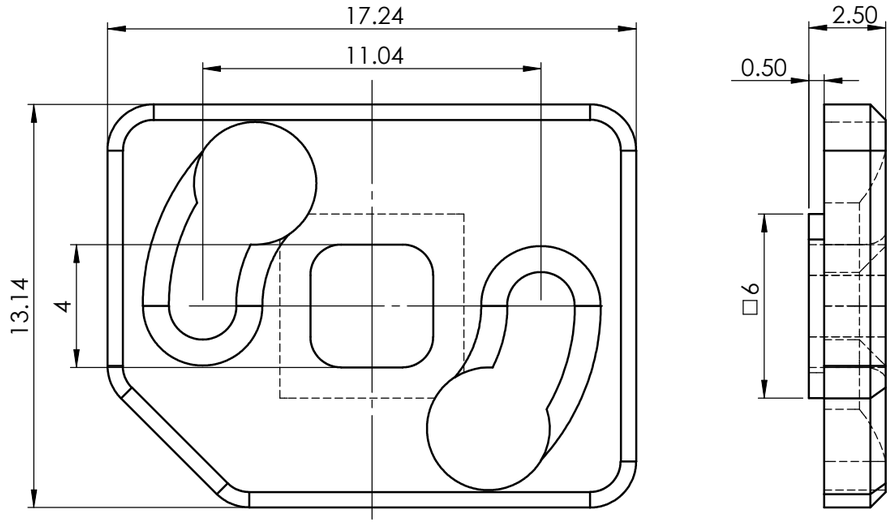

RETENTION FRAME

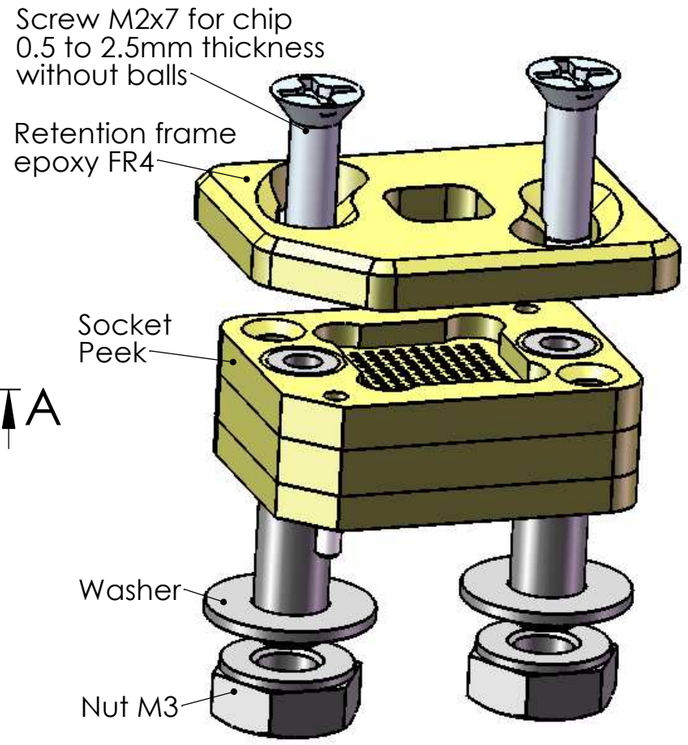

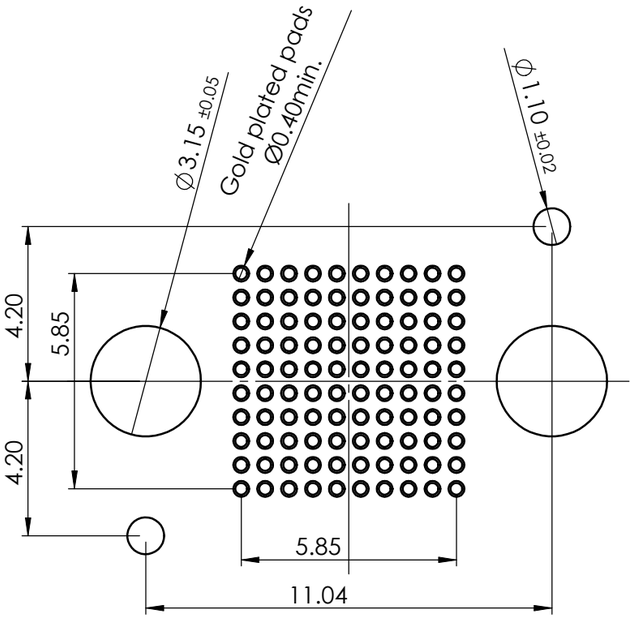

PCB LAYOUT

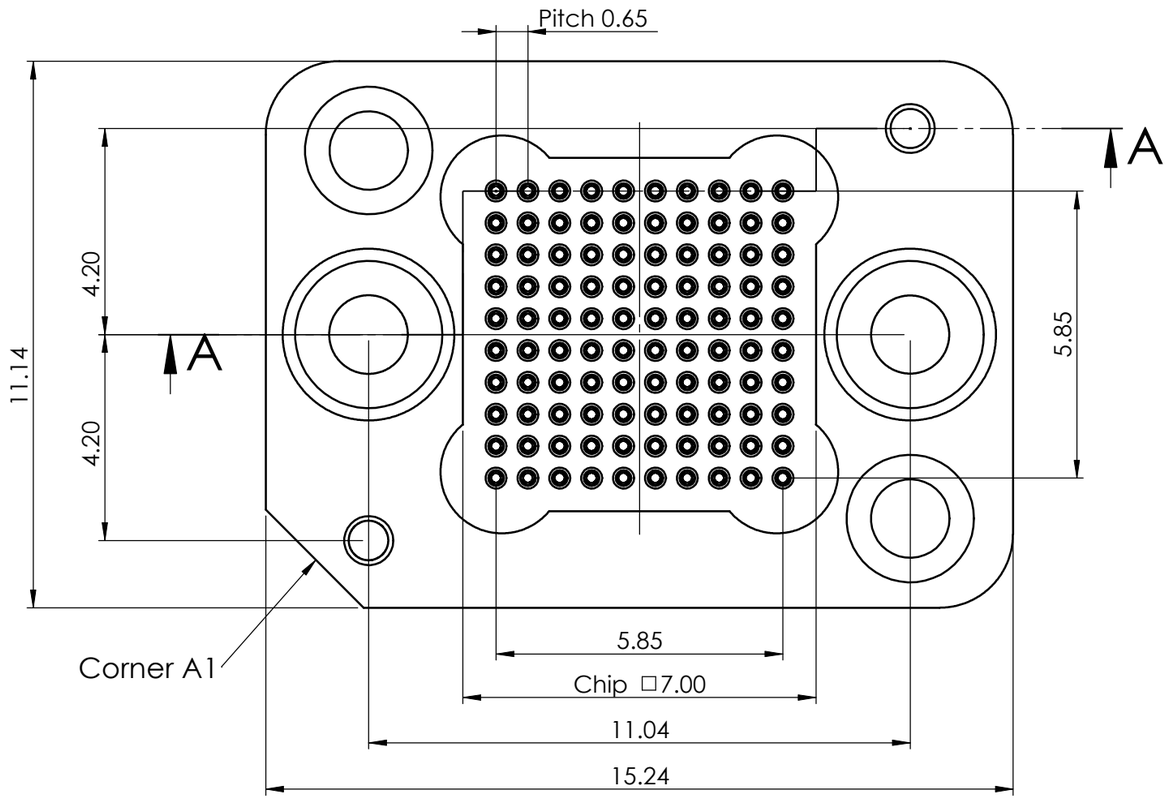

UNLESS OTHERWISE SPECIFIED: DIMENSIONS ARE IN MILLIMETERS SURFACE FINISH: GENERAL TOLERANCES ISO 2768m	Remark: BGA Twistlock socket, 100pins, pitch 0.65mm, matrix 10x10, basic system 5x5					E-tec Interconnect www.e-tec.com
Patented	Visa	Date	Drawn by	Date	Visa	
DRAWN	sme	14.10.2008	sme	14.10.2008		
CHK'D						
APPV'D	K.S	14.10.2008				
			Echelle: 8:1			"E-tec code" BUP100-0690-10AL55L — A3H
The information contained in this drawing is proprietary to Happ AG and shall not be reproduced or disclosed in whole or in part or used for any design or manufacture except whe such user possesses direct, written authorization from Happ AG			MATERIAL: .			"Production code" BUP0100-06-09232-10ALA-L — 0 Revision
			WEIGHT:			SHEET 1 OF 1

G:\Konstruktion\Dessins Solidworks\Dessins\BGA\BUP\BUP100\BUP0100-06-09232-10ALA-L\BUP0100-06-09232-10ALA-L