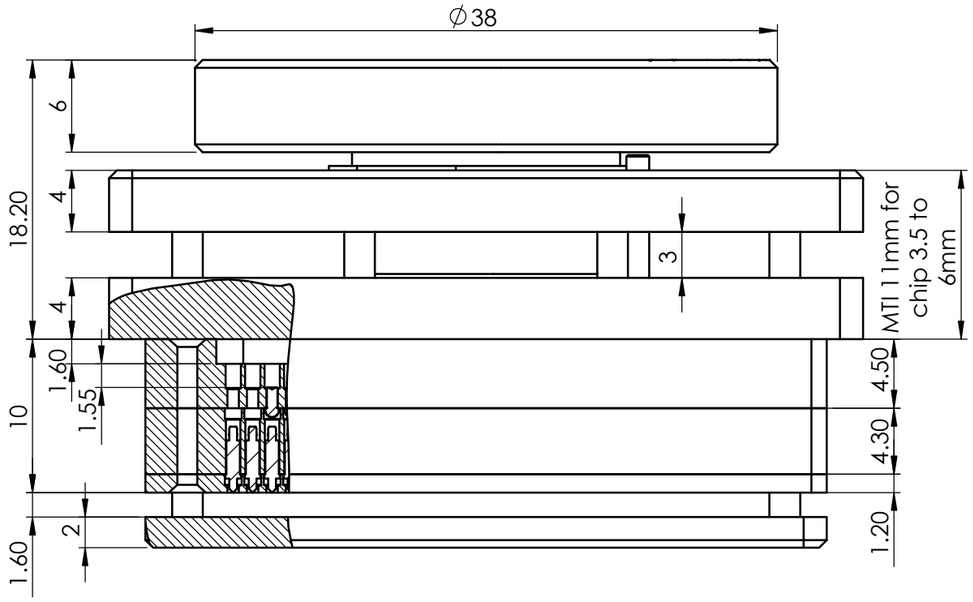

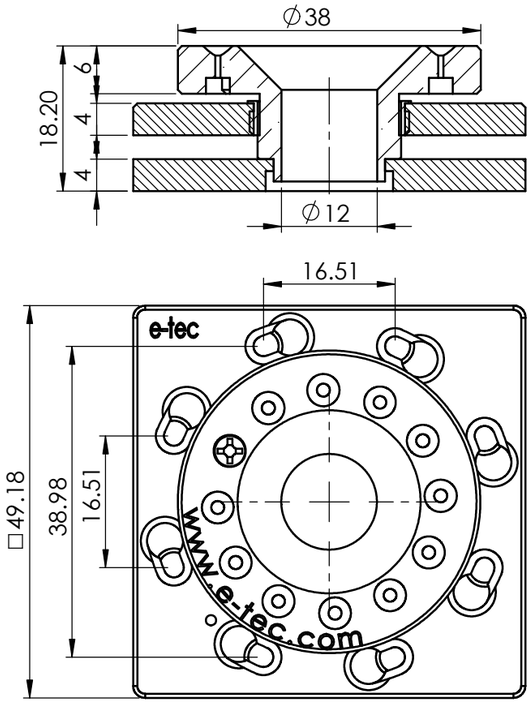

RETENTION FRAME

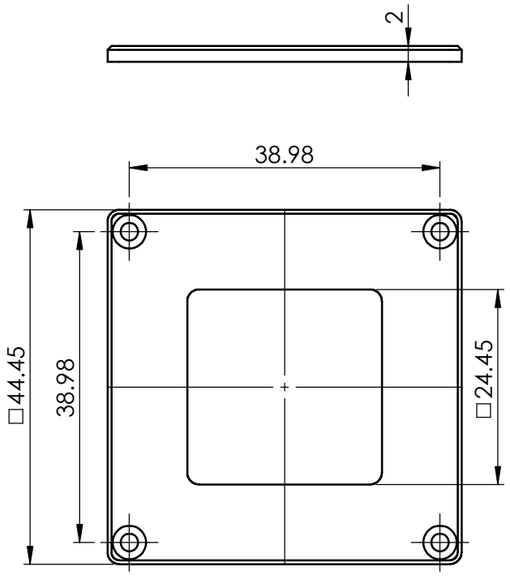

ASSEMBLY BOARD

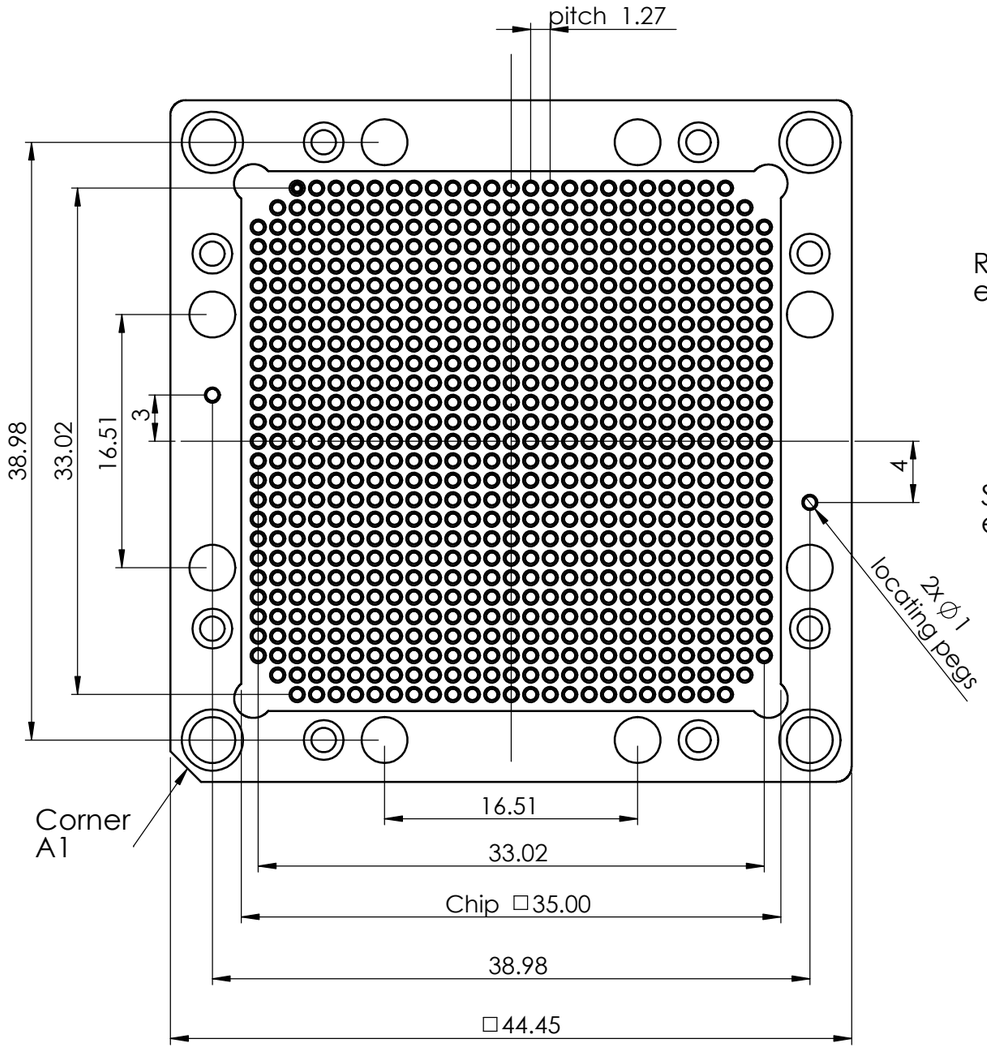

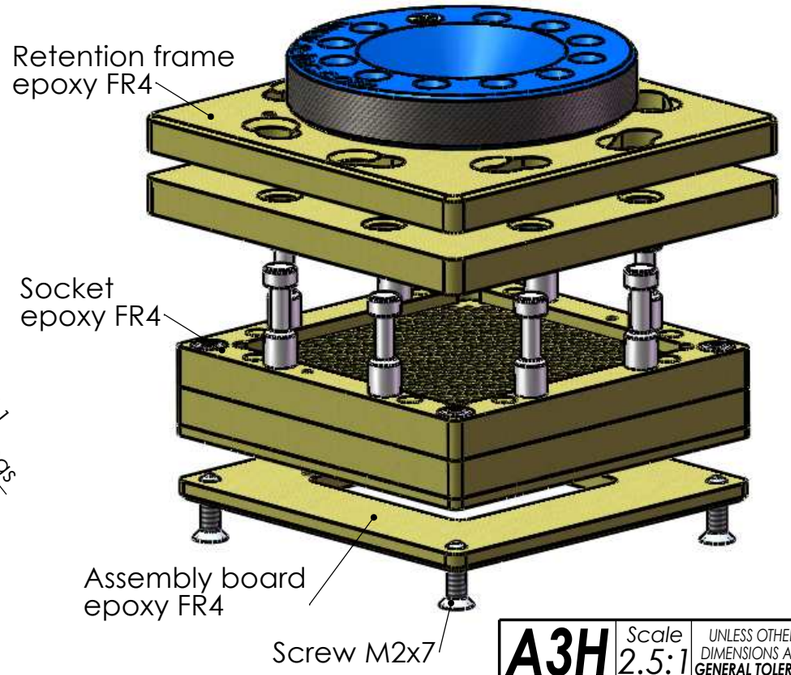

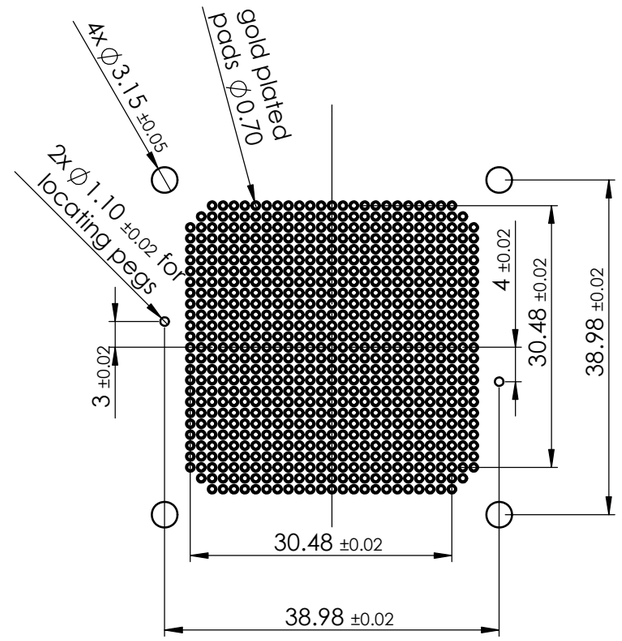

PCB LAYOUT

A3H	Scale 2.5:1	UNLESS OTHERWISE SPECIFIED: DIMENSIONS ARE IN MILLIMETERS GENERAL TOLERANCES ISO 2768m	E-tec Interconnect
patented	REV 0	modif:	Remark: CGA Twist Lock socket, 717 pins, Pitch 1.27mm, matrix 27x27 Retention frame, Basic system 27
The information contained in this drawing is proprietary to **E-tec** and shall not be reproduced or disclosed in whole or in part or used for any design or manufacture except whe such user possesses direct, written authorization from **E-tec**		NAME / DATE	"E-tec order code" **CPF717-1290-27AA55L**
		DRAWN: sme 17.01.2012	"Production code" CPF0717-12-09282-27AAA-L
		REV'D: - -	
		CHK'D: - -	
		APPV'D: sme **17.01.2012**	

www.e-tec.com

G:\Konstruktion\Dessins Solidworks\Dessins\BGA\CPF\CPF0717-12-09282-27AAA-L\CPF0717-12-09282-27AAA-L